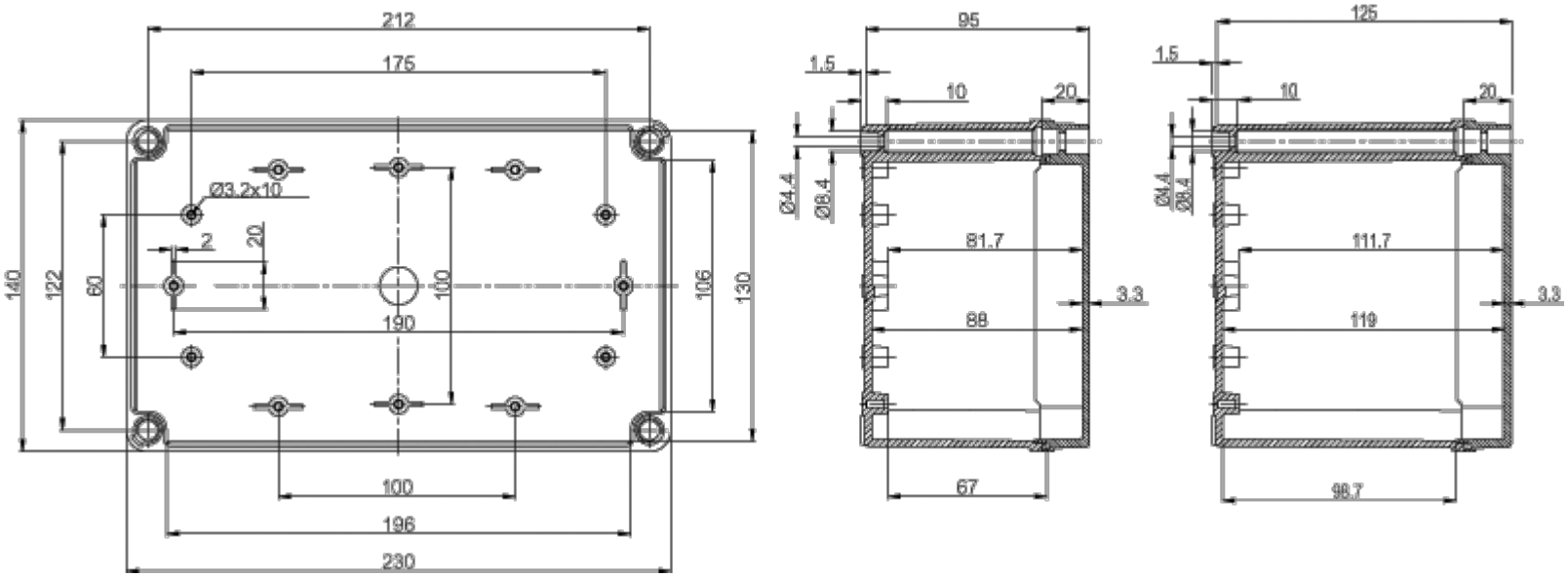
212
175
Ø3.2x10
2
20
140
122
60
100
190
106
130
100
196
230
95
1.5
10
20
Ø4.4
Ø8.4
81.7
3.3
88
67
125
1.5
10
20
Ø4.4
Ø8.4
111.7
3.3
119
98.7